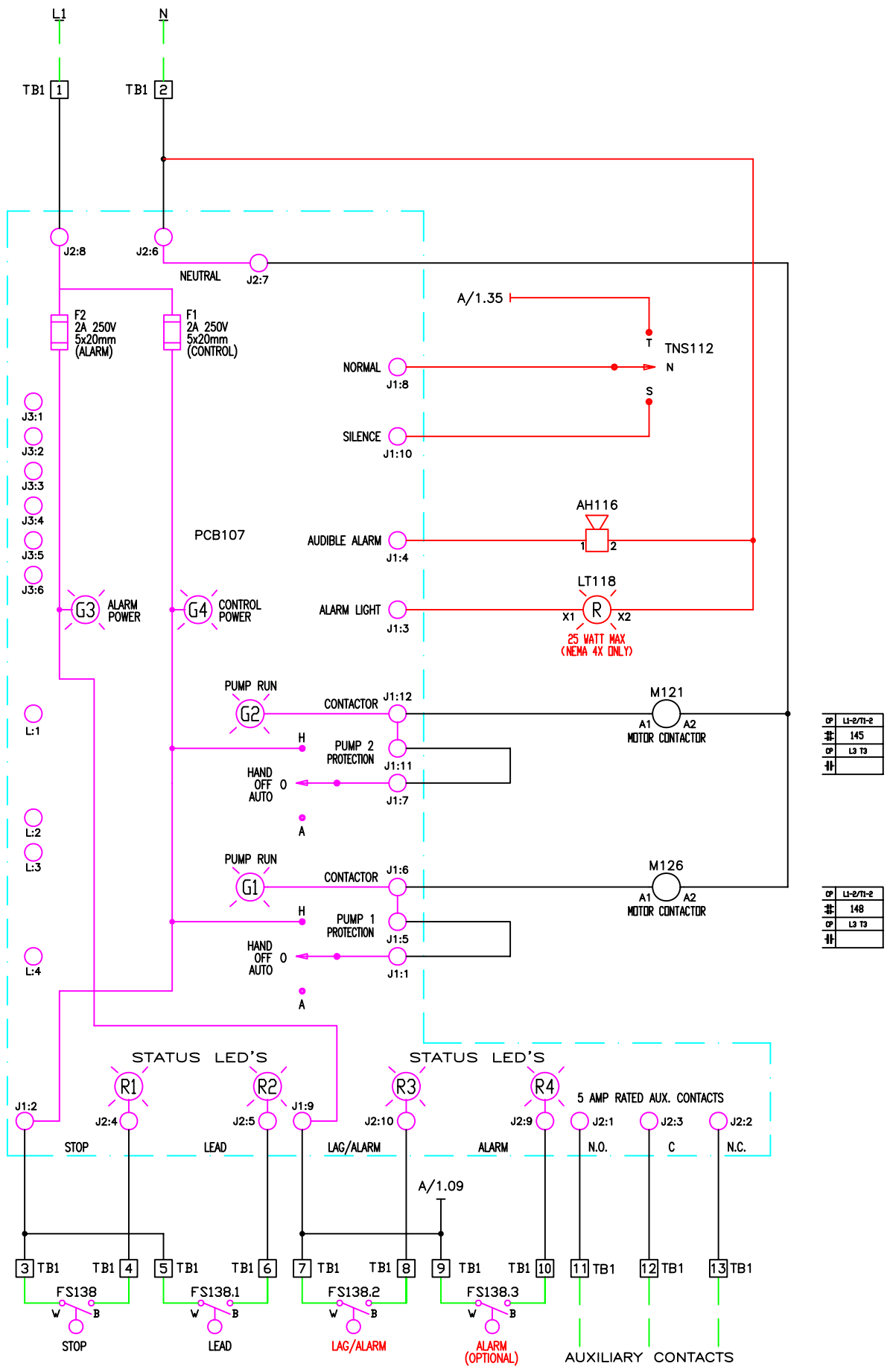

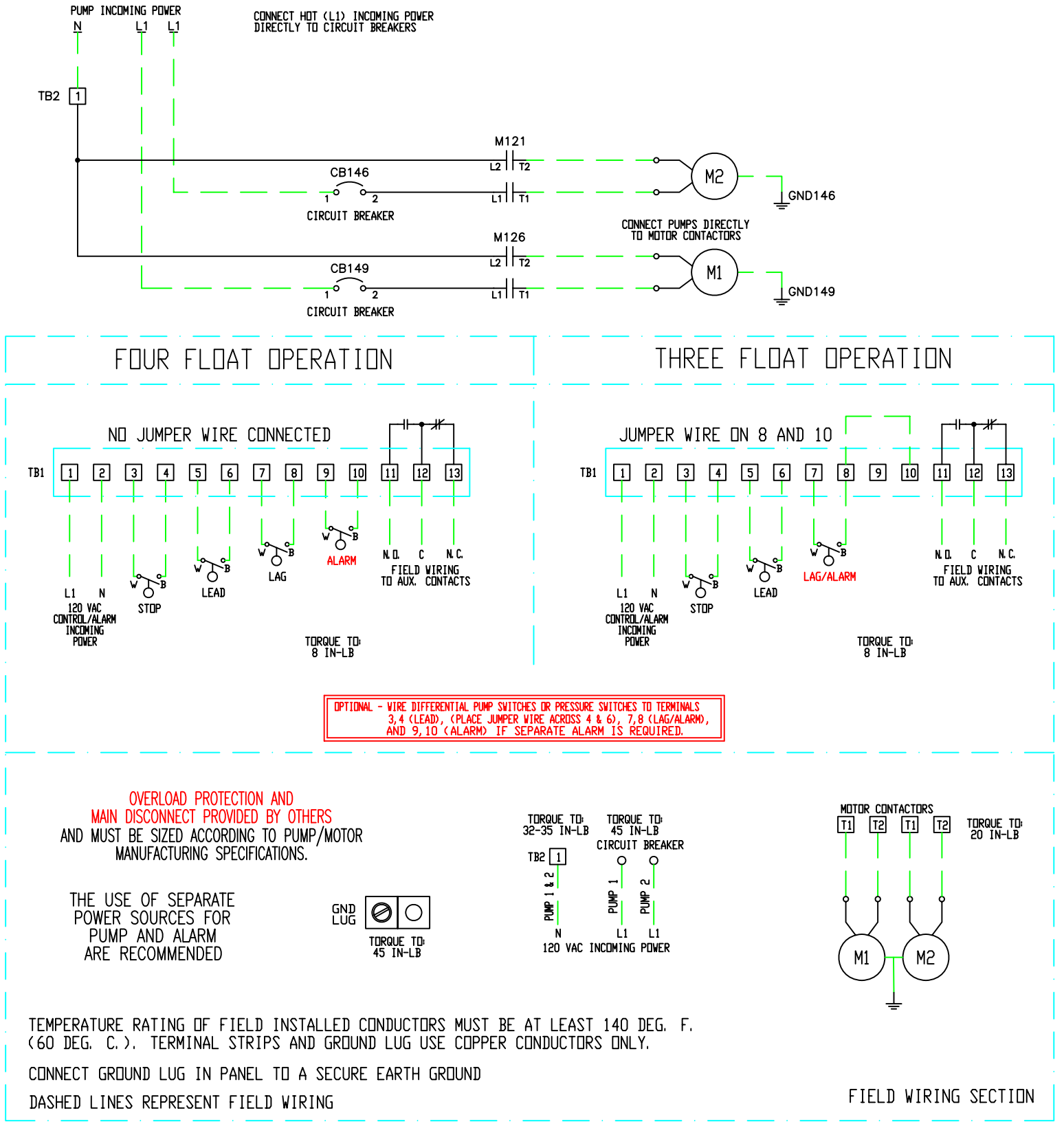

ACTUAL MODEL NUMBER ORDERED

WAS: 1221*9(0,1,2,3)4(H,X)6A*

REV.	ECO NO.	DATE	DRWN	APPD
A	C002613	11/05	GDV	

CNTRL FDR: 1017349

NOTICE: THIS DRAWING CONTAINS PROPIETARY INFORMATION AND IT SHALL NOT BE USED OR REPRODUCED OR ITS CONTENTS DISCLOSED IN WHOLE OR IN PART, WITHOUT PRIOR WRITTEN CONSENT.

SJE-Rhombus CONTROLS

DRWN BY	DATE	CHKD BY	DATE	APPD BY	DATE	PROJECT NO.	QUOTE NO.	REV.
GDV	11/2/05	GDV	11/2/05	KLC	11/3/05	1017349	N/A	A

OEM NAME	OEM P/N	PAGE	SCALE	DWG SIZE	TITLE
N/A	N/A	1 of 1	NONE	D	LIT, RH, SCHEM (SEE ABOVE)